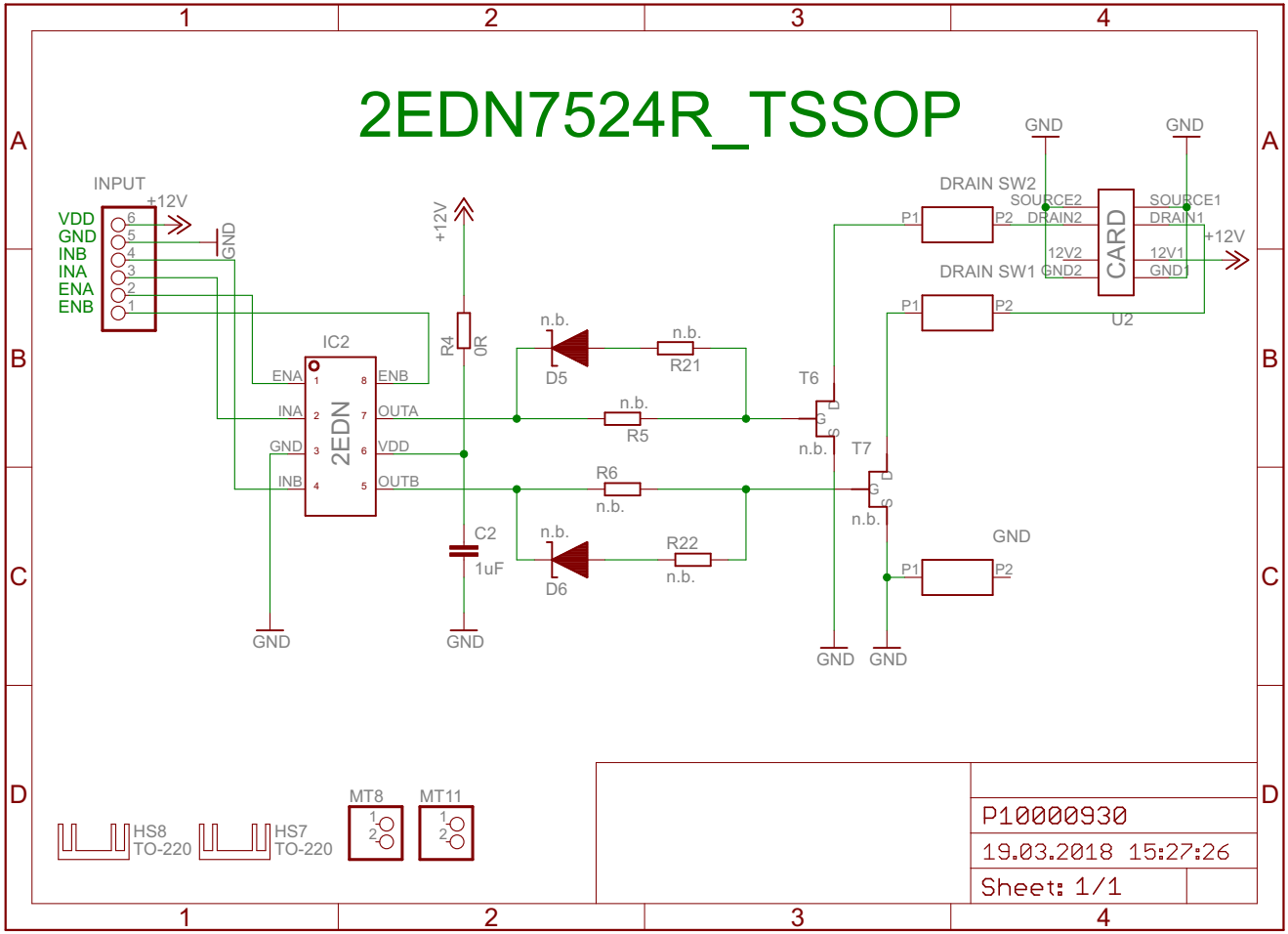
2EDN7524R_TSSOP
INPUT
VDD
GND
INB
INA
ENA
ENB
+12V
GND
IC2
2EDN
ENA
INA
GND
INB
ENB
OUTA
VDD
OUTB
R4
0R
C2
1uF
D5
D6
n.b.
R21
R5
R6
R22
T6
T7
DRAIN SW2
DRAIN SW1
P1
P2
CARD
SOURCE2
DRAIN2
12V2
GND2
SOURCE1
DRAIN1
12V1
GND1
U2
HS8
TO-220
HS7
TO-220
MT8
MT11
P10000930
19.03.2018 15:27:26
Sheet: 1/1